HDM16116H-H

Dimensional Drawing

16 Character x 1 Line, 2 Row connector

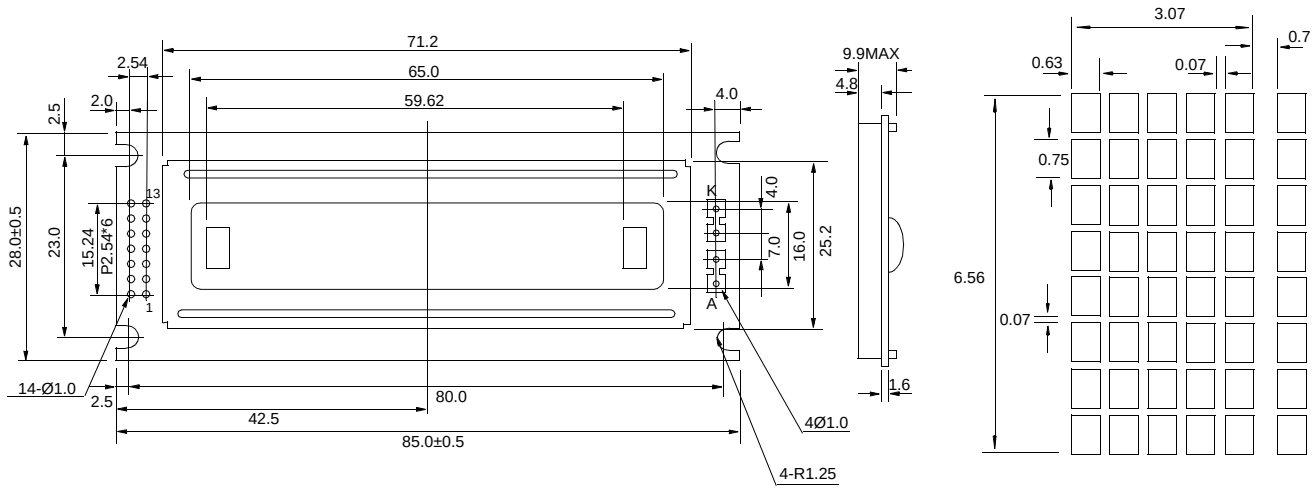

Dimension tolerance: +/-0.3mm

Features

Character Format .....5x7 Dots with Cursor
Backlight.....EL Optional
Options..TN/Gray STN/Yellow STN, 12 o'Clock/6 o'Clock View
Normal/Extended Temperature
Normal/Negative Displays

Physical Data

Module Size.....85.0W x 28.0H x 9.9T mm
Viewing Area Size.....65.0W x 16.0H mm
Weight.....25g

Block Diagram

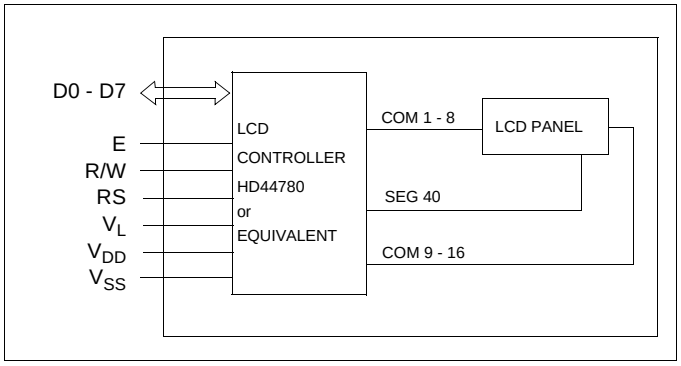

Absolute Maximum Ratings

PARAMETER	SYMBOL	MIN	MAX	UNIT
SUPPLY VOLTAGE	V_{DD}-V_{SS}	0	7.0	V
SUPPLY VOLTAGE FOR LCD	V_{DD}-V_L	0	13.5	V
INPUT VOLTAGE	V_{IN}	V_{SS}	V_{DD}	V
OPERATING TEMPERATURE	T_{OP}	0	50	°C
STORAGE TEMPERATURE	T_{STG}	-20	70	°C

Electrical Characteristics (VDD=5.0±0.25V 25°C)

PARAMETER	SYM	CONDITION	MIN	TYP	MAX	UNIT
INPUT HIGH VOLTAGE	V_{IH}	-	2.2	-	-	V
INPUT LOW VOLTAGE	V_{IL}	-	-	-	.6	V
OUTPUT HIGH VOLTAGE	V_{OH}	I_{OH}=0.2mA	2.4	-	-	V
OUTPUT LOW VOLTAGE	V_{OL}	I_{OL}=1.2mA	-	-	0.4	V
POWER SUPPLY CURRENT	I_{DD}	V_{DD}=5.0V	-	1.0	2.2	mA
POWER SUPPLY FOR LCD	V_{DD}-V_L	TA=25°C	4.3	-	4.7	V
DRIVE METHOD	1/16 Duty					

Pin Connections

PIN NO.	SYMBOL	LEVEL	FUNCTION	
1	V_{SS}	-	0V	Power supply
2	V_{DD}	-	5V	
3	V_L	-	-	
4	RS	H/L	H: Data input L: Instruction data input	
5	R/W	H/L	H: Data read L: Data write	
6	E	H,H→L	Enable signal	
7	D0	H/L	Data bus	
8	D1	H/L		
9	D2	H/L		
10	D3	H/L		
11	D4	H/L		
12	D5	H/L		
13	D6	H/L		
14	D7	H/L		