HiRel NPN Silicon RF Transistor

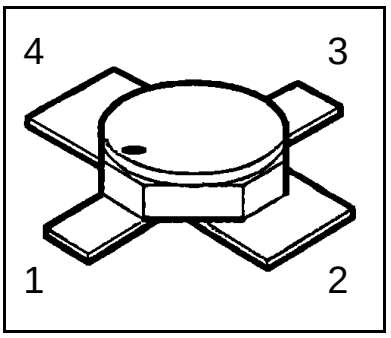

- ***HiRel* Discrete and Microwave Semiconductor**
- For low noise, high-gain broadband amplifiers at collector currents from 2mA to 30mA.
- Hermetically sealed microwave package
- f_T= 8 GHz
  F = 2.3 dB at 2 GHz
- esa qualified
- ESA/SCC Detail Spec.
  No.: 5611/006

ESD: **E**lectro**s**tatic **d**ischarge sensitive device,
observe handling precautions!

Type	Marking	Ordering Code	Pin Configuration				Package
BFY183 (ql)	-	see below	C	E	B	E	Micro-X1

(ql) Quality Level:	P: Professional Quality,	Ordering Code:	Q62702F1609
	H: High Rel Quality,	Ordering Code:	on request
	S: Space Quality,	Ordering Code:	on request
	ES: ESA Space Quality,	Ordering Code:	Q62702F1713

(see order instructions for ordering example)

Maximum Ratings

Parameter	Symbol	Values	Unit
Collector-emitter voltage	V_{CEO}	12	V
Collector-emitter voltage, V_{BE}=0	V_{CES}	20	V
Collector-base voltage	V_{CBO}	20	V
Emitter-base voltage	V_{EBO}	2	V
Collector current	I_C	65	mA
Base current	I_B	5 [1.)]	mA
Total power dissipation, $T_S \leq 99°C$ [2.)]	P_{tot}	450	mW
Junction temperature	T_j	200	°C
Operating temperature range	T_{op}	-65...+200	°C
Storage temperature range	T_{stg}	-65...+200	°C
Thermal Resistance			
Junction-soldering point [2.)]	$R_{th\ JS}$	< 225	K/W

Notes.:

1) The maximum permissible base current for V_{FBE} measurements is 20mA (spot-measurement duration < 1s)

2) T_S is measured on the collector lead at the soldering point to the pcb.

Electrical Characteristics

at T_A=25°C; unless otherwise specified

Parameter	Symbol	Values			Unit
		min.	typ.	max.	
DC Characteristics					
Collector-base cutoff current V_{CB} = 20 V, I_E = 0	I_{CBO}	-	-	100	µA
Collector-emitter cutoff current V_{CE} = 12 V, I_B = 0,3µA [1.)]	I_{CEX}	-	-	300	µA
Collector-base cutoff current V_{CB} = 10 V, I_E = 0	I_{CBO}	-	-	50	nA
Emitter base cuttoff current V_{EB} = 2 V, I_C = 0	I_{EBO}	-	-	25	µA
Emitter base cuttoff current V_{EB} = 1 V, I_C = 0	I_{EBO}	-	-	0.5	µA

Notes:

1.) This Test assures V(BR)CE0 > 12V

Electrical Characteristics (continued)

Parameter	Symbol	Values			Unit
		min.	typ.	max.	
DC Characteristics					
Base-Emitter forward voltage I_E = 30 mA, I_C = 0	V_{FBE}	-	-	1	V
DC current gain I_C = 5 mA, V_{CE} = 6 V	h_{FE}	55	90	160	-
AC Characteristics					
Transition frequency I_C = 20 mA, V_{CE} = 5 V, f = 500 MHz I_C = 25 mA, V_{CE} = 8 V, f = 500 MHz	f_T	 6,5 -	 7.5 8	 - -	GHz
Collector-base capacitance V_{CB} = 10 V, V_{BE} = vbe = 0, f = 1 MHz	C_{CB}	-	0.32	0.44	pF
Collector-emitter capacitance V_{CE} = 10 V, V_{BE} = vbe = 0, f = 1 MHz	C_{CE}	-	0.34	-	pF
Emitter-base capacitance V_{EB} = 0.5V, V_{CB} = vcb = 0, f = 1 MHz	C_{EB}	-	1.1	1.4	pF
Noise Figure I_C = 8 mA, V_{CE} = 5 V, f = 2 GHz, $Z_S = Z_{Sopt}$	F	-	2.3	2.9	dB
Power gain I_C = 20 mA, V_{CE} = 5V, f = 2 GHz $Z_S = Z_{Sopt}$, $Z_L = Z_{Lopt}$	Gma [1.)]	12.5	14	-	dB
Transducer gain I_C = 20 mA, V_{CE} = 5 V, f = 2 GHz $Z_S = Z_L$ = 50 Ω	$\|S_{21e}\|^2$	9	10,5	-	dB
Output Power I_C = 30 mA, V_{CE} = 5 V, f = 2GHz , P_{IN}=7dBm $Z_S = Z_L$ = 50 Ω	P_{OUT}	13.5	14.5	-	dBm

Notes.:

1) $G_{ma} = \left|\frac{S21}{S12}\right|(k - \sqrt{k^2 - 1})$, $G_{ms} = \left|\frac{S21}{S12}\right|$

Order Instructions:

Full type variant including quality level must be specified by the orderer. For *HiRel* Discrete and Microwave Semiconductors the ordering code specifies device family and quality level.

Ordering Form:

Ordering Code: Q.....
BFY183 (ql)
(ql): Quality Level

Ordering Example:

Ordering Code: Q62702F1713
BFY183 ES

For BFY193 in ESA Space Quality Level

Further Informations:

See our WWW-Pages:

- Wireless Semiconductors

  http://www.infineon.com

- *HiRel* Discrete and Microwave Semiconductors

  www.infineon.com/cgi/ecrm.dll/ecrm/scripts/prod_ov.jsp?oid=16149&cat_oid=-8154

Micro-X1 Package

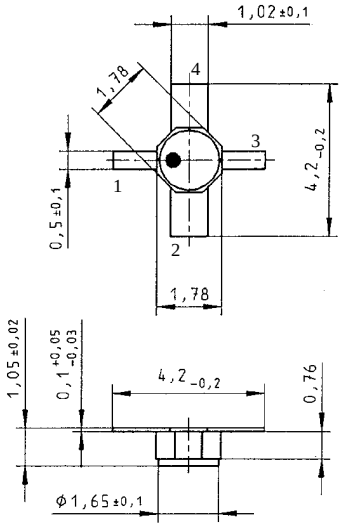

Published by Infineon Technologies Wireless, Discretes Products, Marketing, P.O.Box 801709, D-81617 Munich.