NPN SILICON RF POWER TRANSISTOR

DESCRIPTION:

The **ASI OSC-0.7L** is Designed for General Purpose Oscillator Applications up to 1.68 GHz.

FEATURES:

- V_{CC} = 18 V
- ***Omnigold***™ Metalization System

MAXIMUM RATINGS

I_C	150 mA
V_{CB}	40 V
P_{DISS}	7.0 W @ T_C = 25 °C
T_J	-65 °C to +200 °C
T_{STG}	-65 °C to +200 °C
θ_{JC}	25 °C/W

PACKAGE STYLE TO-46

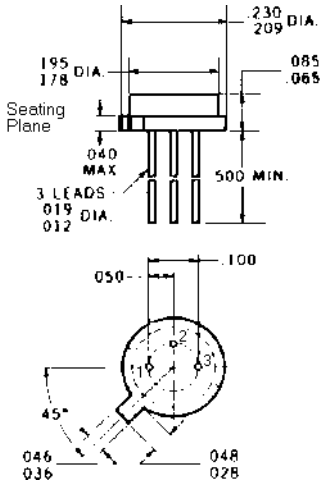

ORDER CODE: ASI10637

CHARACTERISTICS T_C = 25 °C

SYMBOL	TEST CONDITIONS			MINIMUM	TYPICAL	MAXIMUM	UNITS
BV_{CEO}	I_C = 1.0 mA			20			V
BV_{CBO}	I_C = 100 µA			40			V
BV_{EBO}	I_E = 100 µA			3.0			V
I_{CBO}	V_{CB} = 18 V					100	µA
h_{FE}	V_{CE} = 5.0 V	I_C = 100 mA		25		250	---
C_{OB}	V_{CB} = 18 V		f = 1.0 MHz			5.0	pF
η_C	V_{CC} = 18 V	P_{OUT} = 0.7 W	f = 1.68 GHz		25		%
f_t	V_{CE} = 10 V	I_E = 100 mA	f = 200 MHz		2,500		MHz
P_{OSC}	V_{CC} = 18 V	I_E = 150 mA	f = 1.68 GHz		700		mW

Specifications are subject to change without notice.