Bottom entry type

● TM13R- ※※

HRS No.	Part No.	A	B	C	D
CL222-2034-7	TM13R-44	19	10	8	15.8
CL222-2066-3	TM13R-62	21	12	10	17.8
CL222-2033-4	TM13R-64	21	12	10	17.8
CL222-2125-0	TM13R-66	21	12	10	17.8

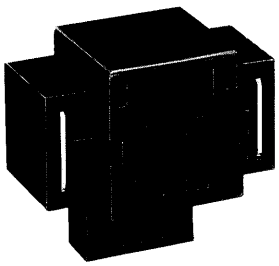

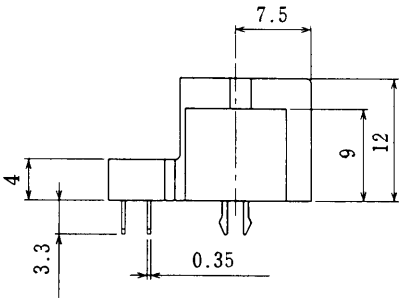

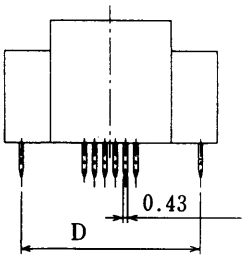

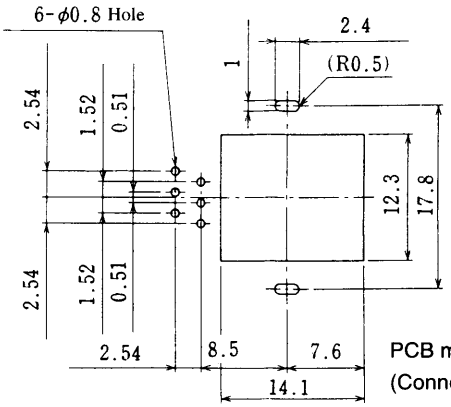

PCB mounting hole layout
(Connector mounting side)

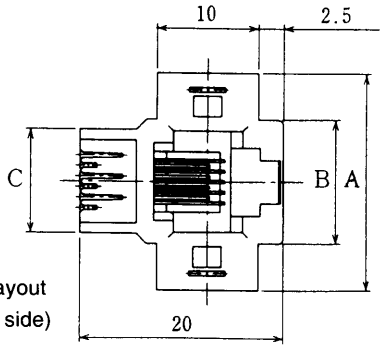

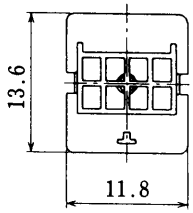

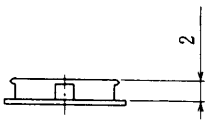

● TM13RA-1010
CL222-1806-2

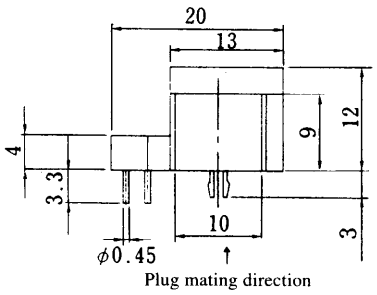

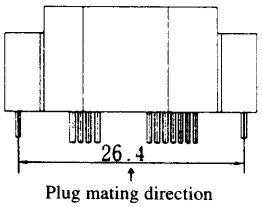

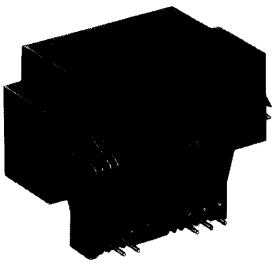

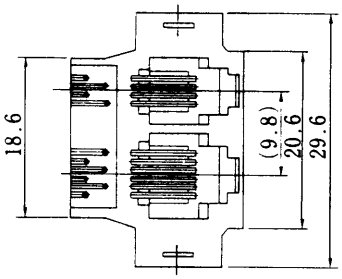

PCB mounting hole layout
(Connector mounting side)

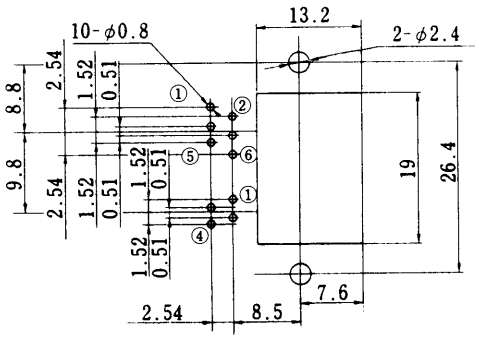

Note 1: Standard finish color is black.
Note 2: Available reverse type of products for 4 pins, 6 pins.
TM13R-10※※